ATOM ELECTRIC MOTOR POD IS ILLUSTRATED IN UPSIDE-DOWN ASSEMBLY POSITION. ALL PARTS DROP INTO TOP COVER. BOTTOM COVER SCREWED DOWN TO CLAMP ALL PARTS

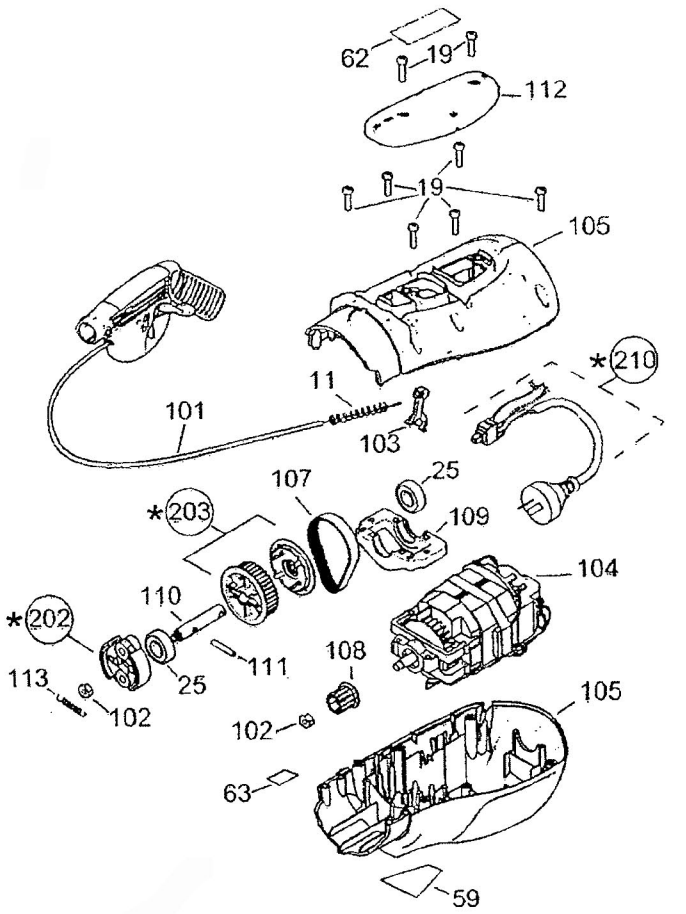

ATOM PRODUCT: ENGINE 240V (POD Motor) **MODEL NO: 769** **PART NO: 63446A**

Key	Part No	Substitute Part No	NLA*	Description	Key	Part No	Substitute Part No	NLA*	Description	Key	Part No	Substitute Part No	NLA*	Description
11	43198			SPRING TRIGGER COMPRESS										
19	43790			SCREW M5.5mm x 22										
25	63474			BEARING 32 x 10 x 12										
59														
62														
63	63531			LABEL DO NOT START MOTOR										
101	63002			CABLE THROTTLE 968mm										
102	62944			NUT M8 x 1.25mm Z/P										
103	63008GN			SWITCH LEVER POD										
104	63015			MOTOR 240V POD										
105	63966AGN			SET BODY UPPER/LOWER POD										
106														
107	63079			BELT ELECTRIC										
108	63080GN			PULLEY SMALL 14T										
109	63083GN			BEARING NEST										
110	63228			SHAFT POD PULLEY										
111	63275			PIN ROLL 5 x 30										
112	63373GN			COVER AIR INTAKE POD										
113	63390			SPRING CLUTCH ELECTRIC										
202	63035A			ASSY CLUTCH 54mm ELECTRIC										
203	63365AGN			ASSY PULLEY BIG										
210	63459A			ASSY SWITCH, PLUG, CABLE										